Momentum, Energy and Projectiles

In each of the boxes attached to the diagram, explain what is happening and the concepts that are involved. Assume that the table top is frictionless.

Lots of juicy concepts here in this old Physics B set up.

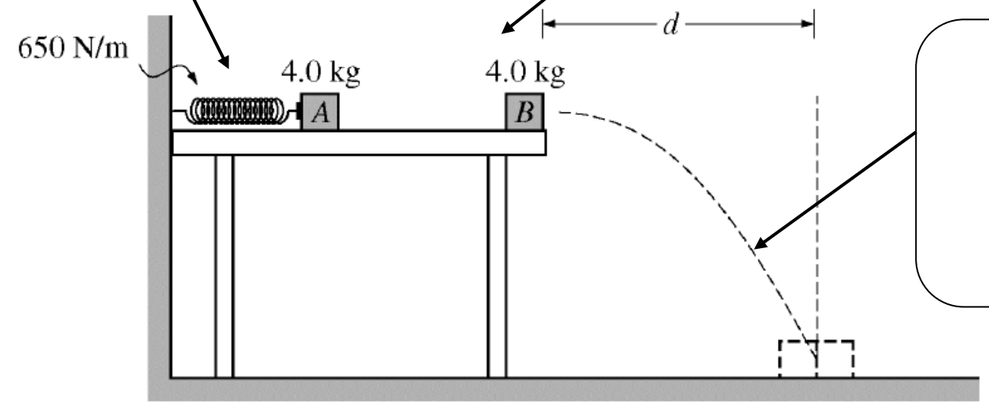

Note: Figure not drawn to scale.

Question: Is the KE of block A greater, smaller or the same as that of the combined blocks immediately after the collision?

Greater	Same	Less

Justify:

Describe, in PW style note form, the steps that you would take in order to calculate the distance *d* travelled by the blocks. Make it clear using 'statements of physics'. (You do not actually need to solve, it is the process that is important – but you can if you want)

This problem uses a spring to accelerate block A in order to get things going. How else could we do the same job?

Suggest some ways to increase the range of the projectile, clearly stating the underlying principles.