Bermuda College

Principles of Physics II

Exam

2 hrs

There are 7 questions on the following topics.

1. Thermal Physics
2. Magnetism
3. Electricity
4. Astrophysics
5. Energy
6. Waves and Sound
7. Optics

Choose any 5 questions.

Each question worth 10 marks.

Budget 20 mins per question.

Open book. Work on paper. You may include labeled diagrams. At the end scan your work and email it to me. Make sure your name is clearly written on every page!

1 – Thermal Physics

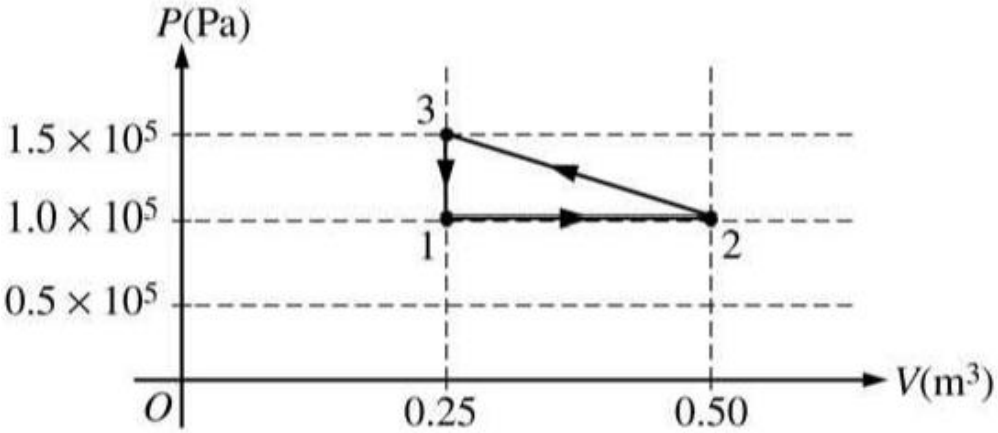

A cylinder with a movable frictionless piston contains an ideal gas that is initially in state 1 at 1×10^5 Pa, 373 K, and 0.25 m^3. The gas is taken through a reversible thermodynamic cycle as shown in the *PV* diagram above.

a. Calculate the temperature of the gas when it is in the following states.

   i. State 2 (2)

   ii. State 3 (2)

b. Calculate the net work done on the gas during the cycle. (3)

c. Was heat added to or removed from the gas during the cycle? Justify your answer. (3)

a. i. $P_1 = P_2$ so $V_1/T_1 = V_2/T_2$ giving $T_2 = 746$ K
   ii. $V_1 = V_3$ so $P_1/T_1 = P_3/T_3$ giving $T_3 = 560$ K

b. The net work done is the area enclosed by the triangle = ½ base × height = +6250 J (positive since the cycle is counterclockwise)

c. Since the cycle is counterclockwise, the work done on the gas is positive (more area under the process 2⇨3 in which positive work is done than in process 1⇨2 where negative work is done). In any cycle $\Delta U = 0$ so we have $Q = -W$, therefore Q is negative meaning heat is removed.

2 - Magnetism

a) Describe a method of making a simple magnet from a nail. (2)

b) A much stronger magnet can be made using electricity. Describe how to make an electromagnet from a 9V battery. (2)

c) An important use of magnetism is that when an electric current is flowing through a magnetic field a force is produced. Describe this effect (2)

d) If a current of 4.0 A is flowing through a magnetic field of strength 0.1 T along a wire of 0.5 m long, calculate the force produced. (2)

e) Another important use of magnetism is electromagnetic induction. Explain why is this so important. (2)

3 - Electricity

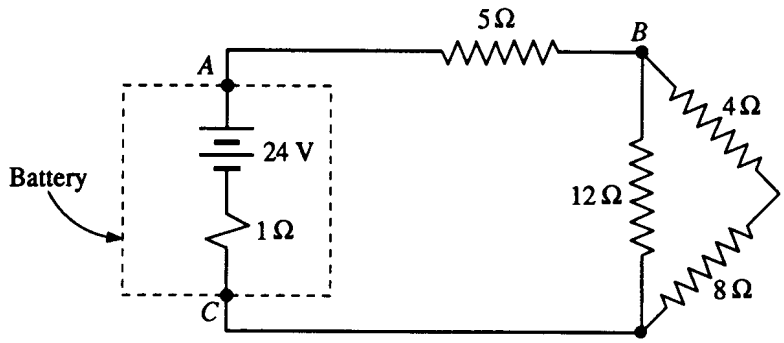

A battery with an *emf* of 24 volts and an internal resistance of 1 Ω is connected to an external circuit as shown above. Determine each of the following:

a) The equivalent resistance of the combination of the 4 Ω, 8 Ω, and 12 Ω resistors (2)

b) The overall resistance of the entire circuit. (2)

c) The current in the 5 Ω resistor (2)

d) The terminal voltage, V_{AC} of the battery (1)

e) The magnitude of the potential difference V_{BC} (1)

f) The power delivered by the battery to the external circuit (2)

a. The 4 Ω and 8 Ω are in series so their equivalent resistance is 12 Ω. Another 12 Ω resistor in parallel makes the equivalent resistance (12 × 12)/(12 + 12) = 6 Ω
b. 6 + 5 + 1 = 12 Ω
c) Adding the remaining resistors in series throughout the circuit gives a total circuit resistance of 12 Ω and the total current (which is also the current in the 5 Ω resistor) = $\mathcal{E}$/R = 2 A
c. $V_{AC} = \mathcal{E} - Ir = 22$ V
d. The current divides equally between the two branches on the right so $P_{12} = I^2R = (1\text{ A})^2(12\ \Omega) = 12$ W
e. From B to C you only have to pass through the 12 Ω resistor which gives V = (1 A)(12 Ω) = 12 V
f. $P_B = V_{AC}^2/R_{external} = (22\text{ V})^2/11\ \Omega = 44$ W

4 - Astrophysics

The Sun is a yellow star.

a) Explain why stars are different colours. (3)

b) Describe the processes that are happening inside a star and why it remains stable. (4)

c) Describe what happens to the core when a massive star runs out of 'fuel'. (3)

5 - Energy Resources

There are numerous energy resources that can be used to generate electricity.

a) Explain how electricity is generated in Bermuda. (4)

b) Describe TWO other methods of generating electricity, outlining a major advantage and disadvantage of each system. (6)

6 – Waves and Sound

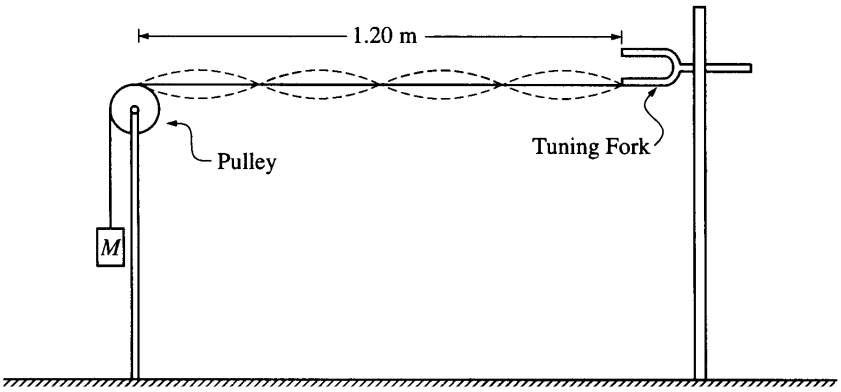

To demonstrate standing waves (harmonics), one end of a string is attached to a tuning fork with frequency 120 Hz. The other end of the string passes over a pulley and is connected to a suspended mass *M* as shown in the figure above. The value of *M* is such that the standing wave pattern has four "loops." The length of the string from the tuning fork to the point where the string touches the top of the pulley is 1.20 m. The linear density of the string is 1.0×10^{-4} kg/m, and remains constant throughout the experiment.

a) Determine the wavelength of the standing wave. (2)

b) Determine the speed of transverse waves along the string. (3)

c) The speed of waves along the string increases with increasing tension in the string. Indicate whether the value of M should be increased or decreased in order to double the number of loops in the standing wave pattern. Justify your answer. (3)

d) If a point on the string at an antinode moves a total vertical distance of 4 cm during one complete cycle, what is the amplitude of the standing wave? (2)

a) λ = dist / cycles = 1.2 m / 4 = 0.60 m
b) $v = f\lambda = (120)(0.60) = 72$ m/s
c) More 'loops' means a smaller wavelength. The frequency of the tuning fork is constant. Based on $v = f\lambda$, less speed would be required to make smaller wavelength. Since speed is based on tension, less M, makes less speed.
d) In one full cycle, a point on a wave covers 4 amplitudes … up, down, down, up. …So the amplitude is 1 cm.

7 - Optics

A thin converging lens *L* of focal length 10.0 cm is used as a simple magnifier to examine an object O that is placed 6.0 cm from the lens.

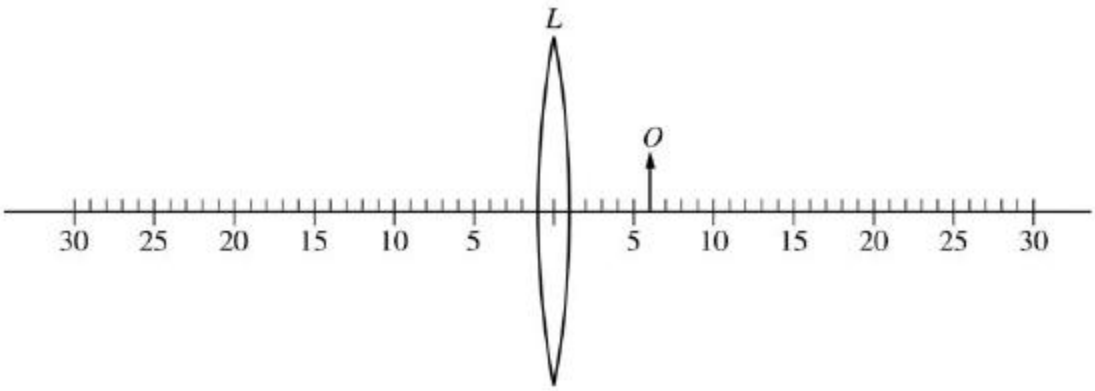

a) Draw a ray diagram showing at least two incident rays and the position and size of the image formed. (3)

b) Is the image real or virtual? . Justify your answer. (2)

c) **Calculate** the distance of the image from the center of the lens. (3)

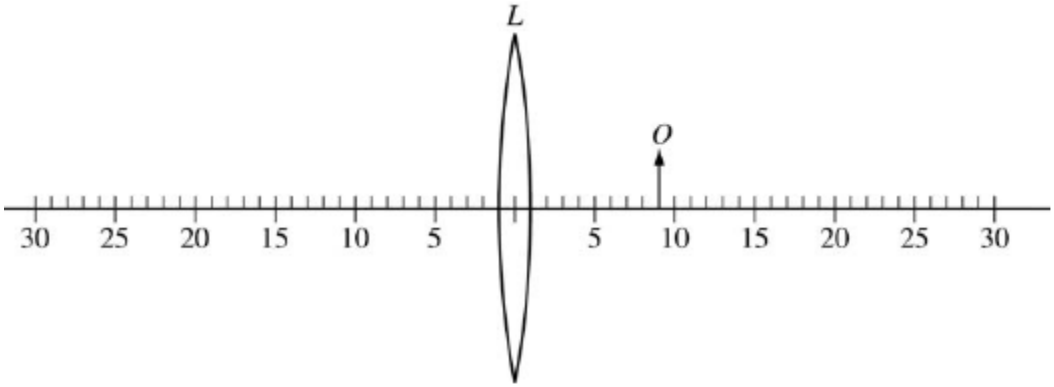

d) The object is now moved 3.0 cm to the right, as shown above. How does the height of the new image compare with that of the previous image? Justify your answer. (2)